-Opamp topologies using biasing circuit :

1)Folded N-type:

Schematic:

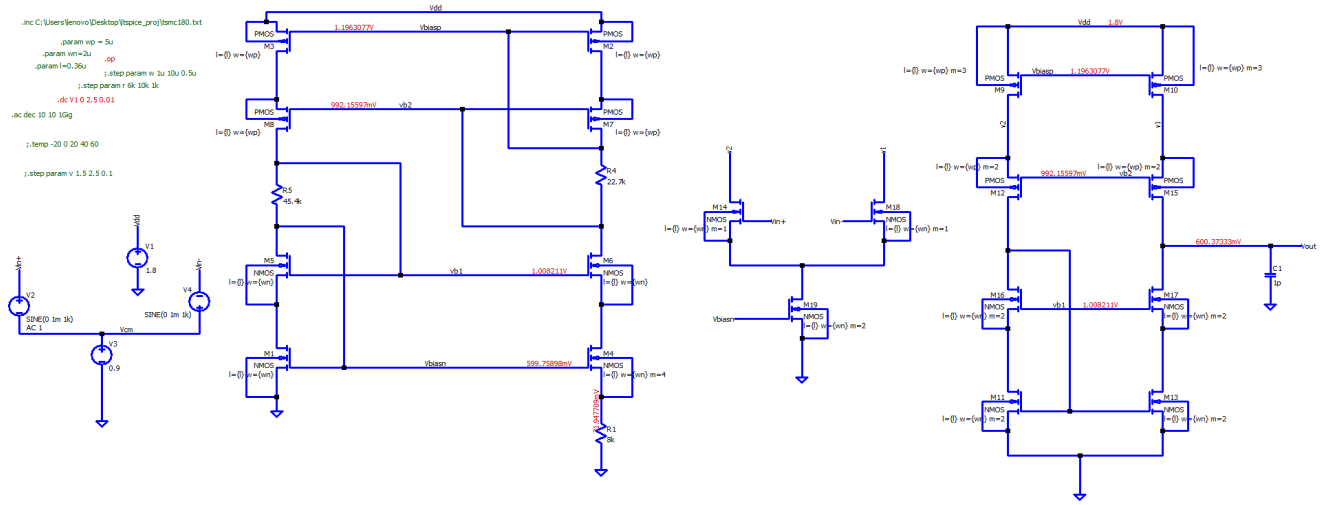

Ac analysis:

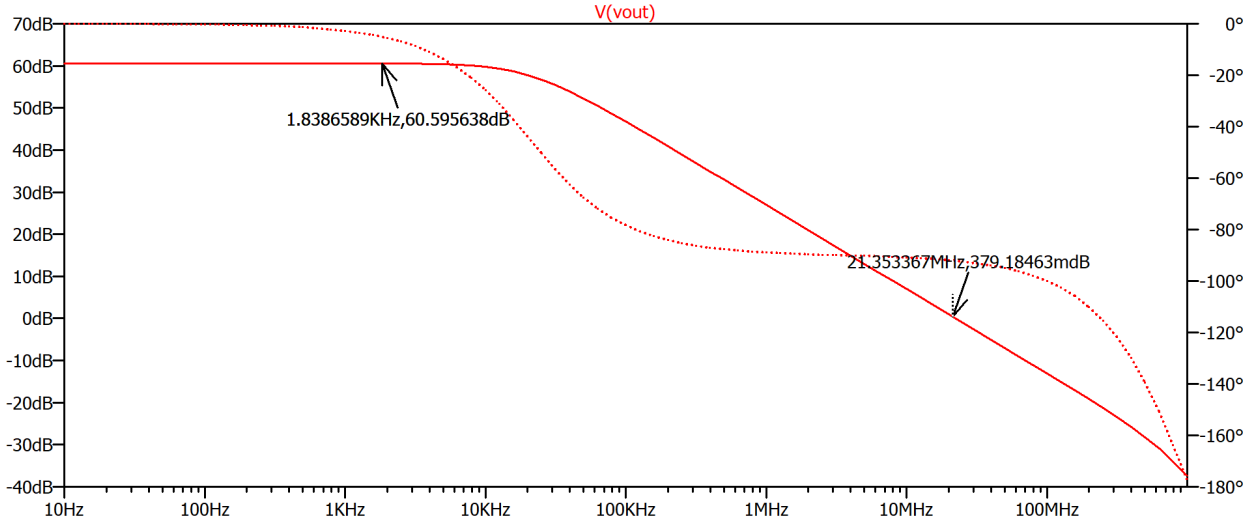

2) Folded p-type:

Schematic:

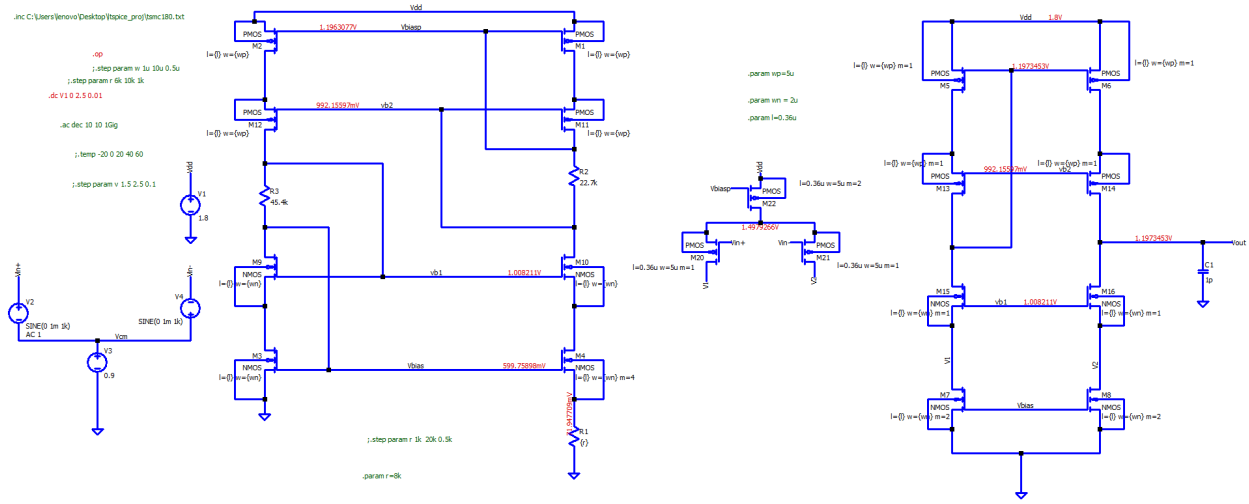

Ac analysis:

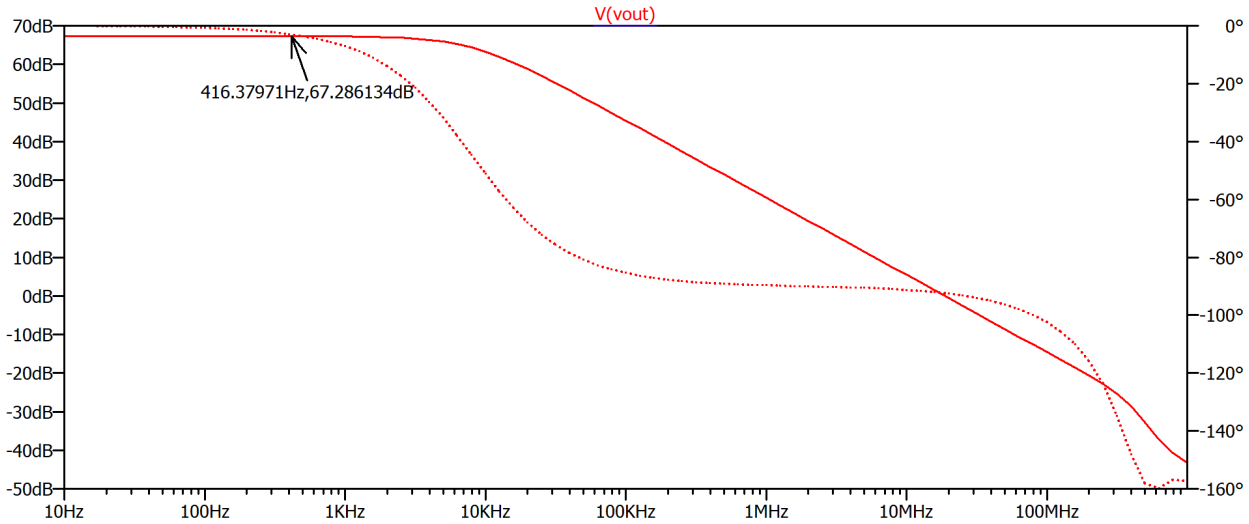

3)Telescopic N-MOS:

Schematic

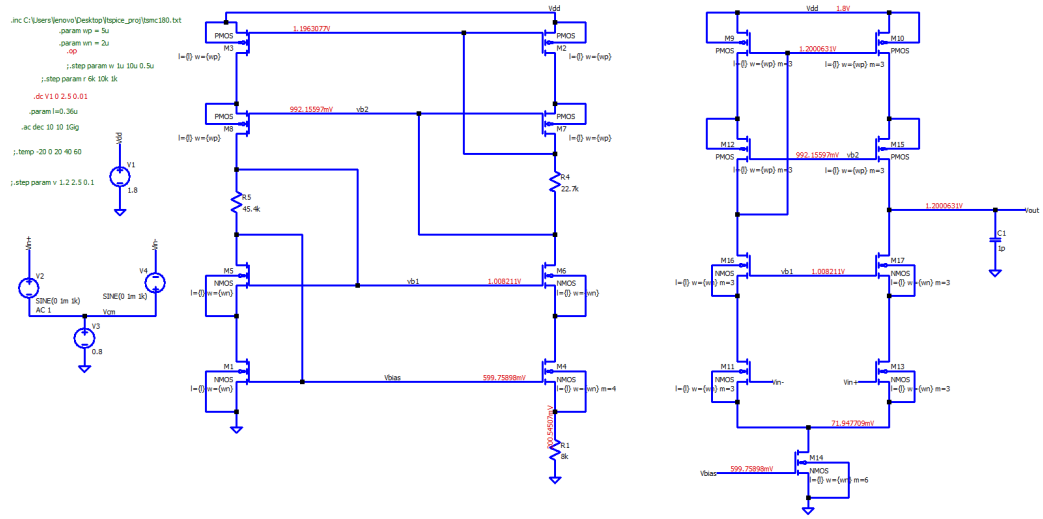

Ac analysis:

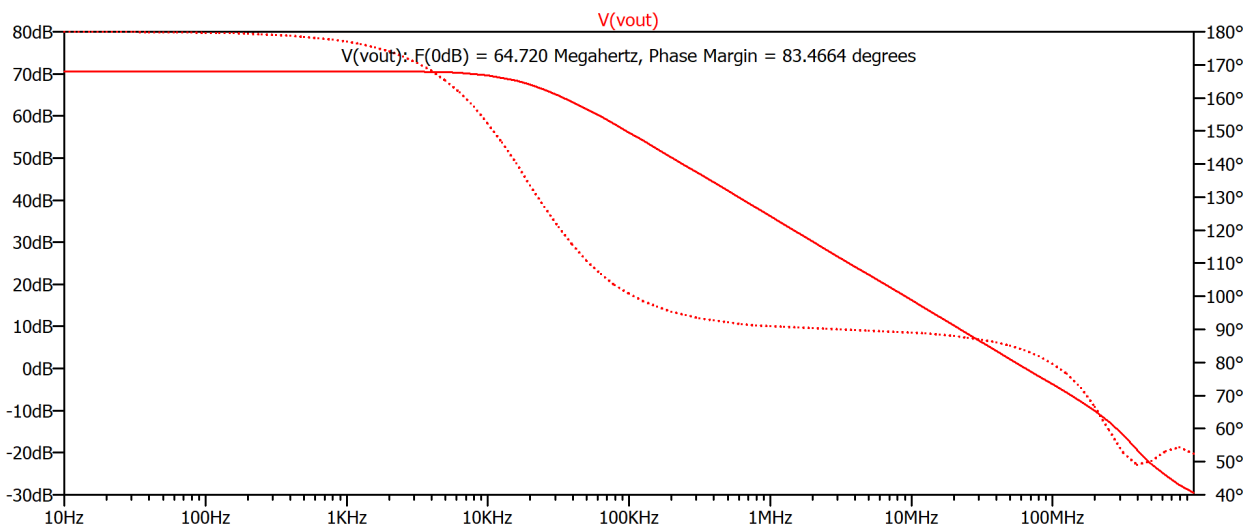

4)Telescopic P-MOS:

Schematic:

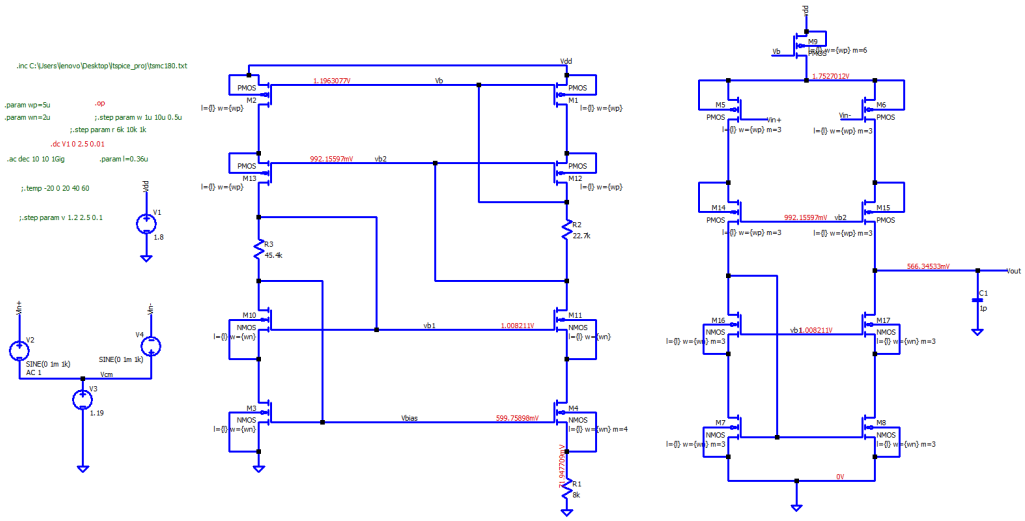
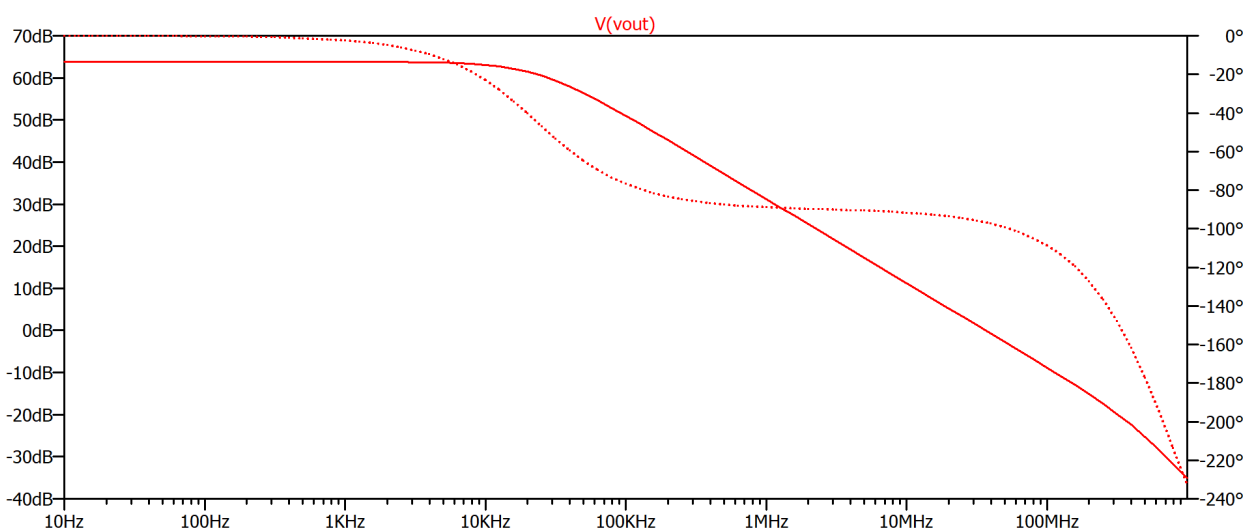
Ac analysis: